Weather Shield™

Contemporary Collection

2-1/4" Multi-Slide Doors

CROSS SECTION DETAILS

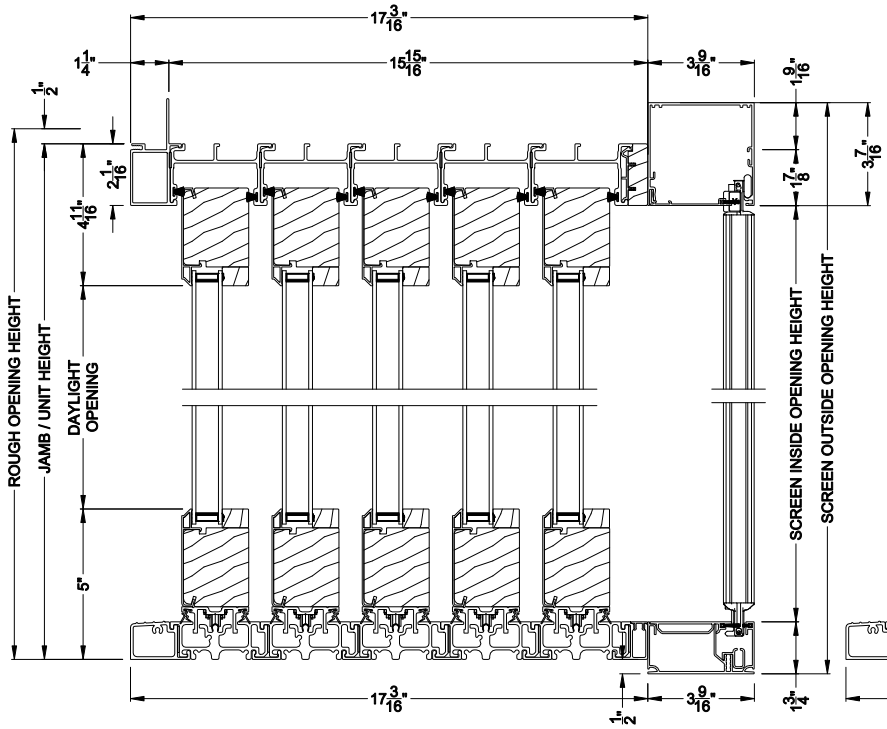

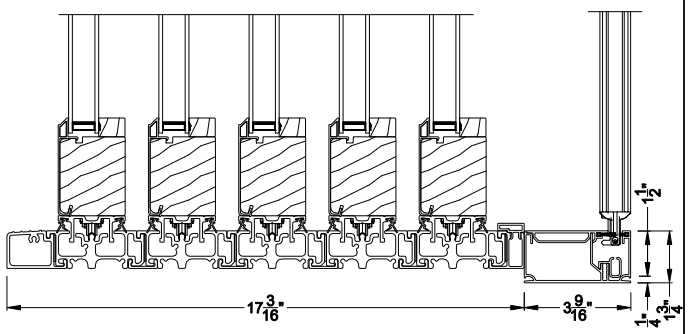

CONTEMPORARY 2-1/4" MULTI-SLIDE PATIO DOOR (8726)
Vertical Section - Standard Sill - 5 or Bi-parting 10 Panel Door
Shown with optional Centor screen - recess mounted

CONTEMPORARY 2-1/4" MULTI-SLIDE PATIO DOOR (8726)
Vertical Section - with Sill Riser - 5 or Bi-parting 10 Panel Door
Shown with optional Centor screen - recess mounted

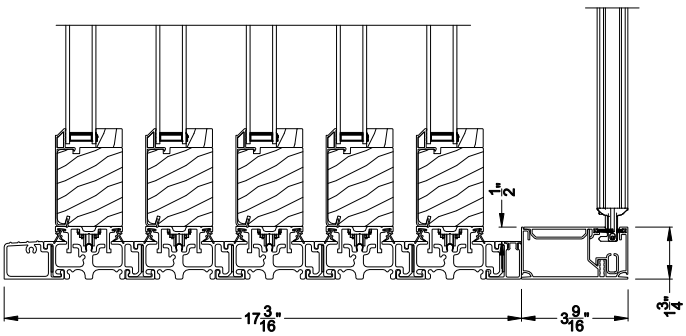

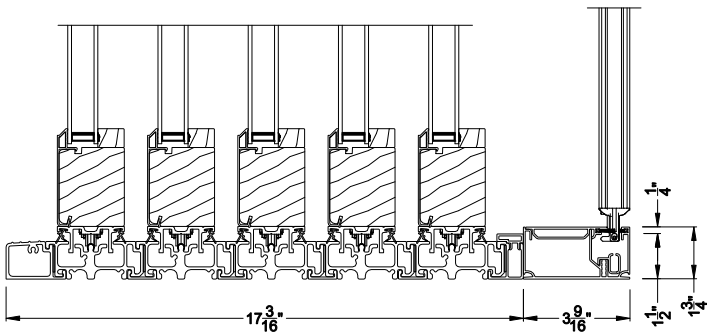

CONTEMPORARY 2-1/4" MULTI-SLIDE PATIO DOOR (8726)
Vertical Section - Standard Sill - 5 or Bi-parting 10 Panel Door
Shown with optional Centor screen - flush mounted

CONTEMPORARY 2-1/4" MULTI-SLIDE PATIO DOOR (8726)
Vertical Section - with Sill Riser - 5 or Bi-parting 10 Panel Door
Shown with optional Centor screen - flush mounted

Note: All dimensions are approximate. Weather Shield reserves the right to change specifications without notice.

Weather Shield™

Contemporary Collection

2-1/4" Multi-Slide Doors

CROSS SECTION DETAILS

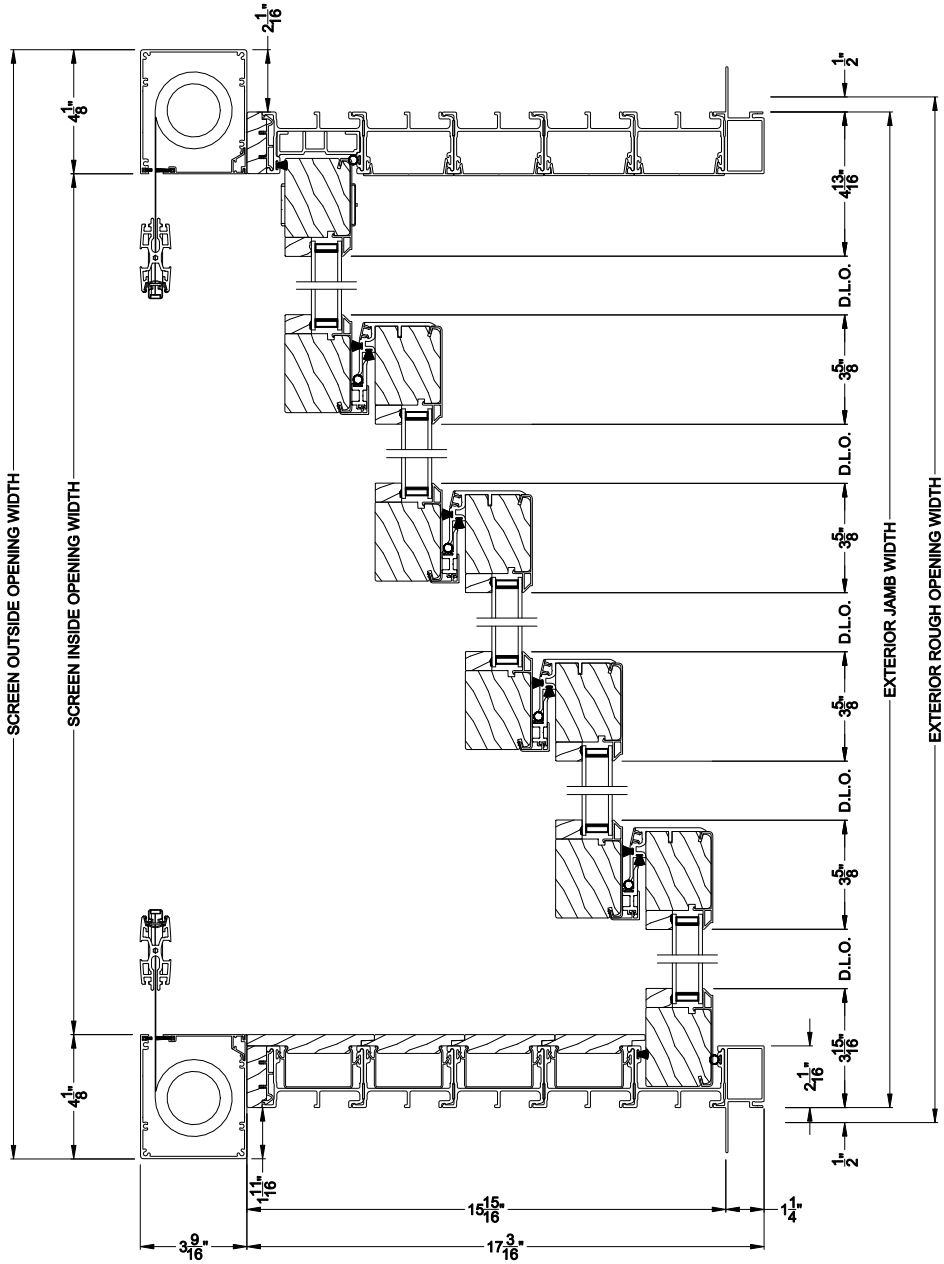

CONTEMPORARY 2-1/4" MULTI-SLIDE PATIO DOOR (8726)

Horizontal Section - 5 Panel Door
Shown with optional Center screen

Note: All dimensions are approximate. Weather Shield reserves the right to change specifications without notice.

Weather Shield™

Contemporary Collection

2-1/4" Multi-Slide Doors

CROSS SECTION DETAILS

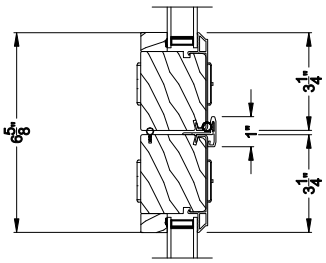

CONTEMPORARY 2-1/4" MULTI-SLIDE PATIO DOOR (8726)

Horizontal Section - Bi-parting stiles

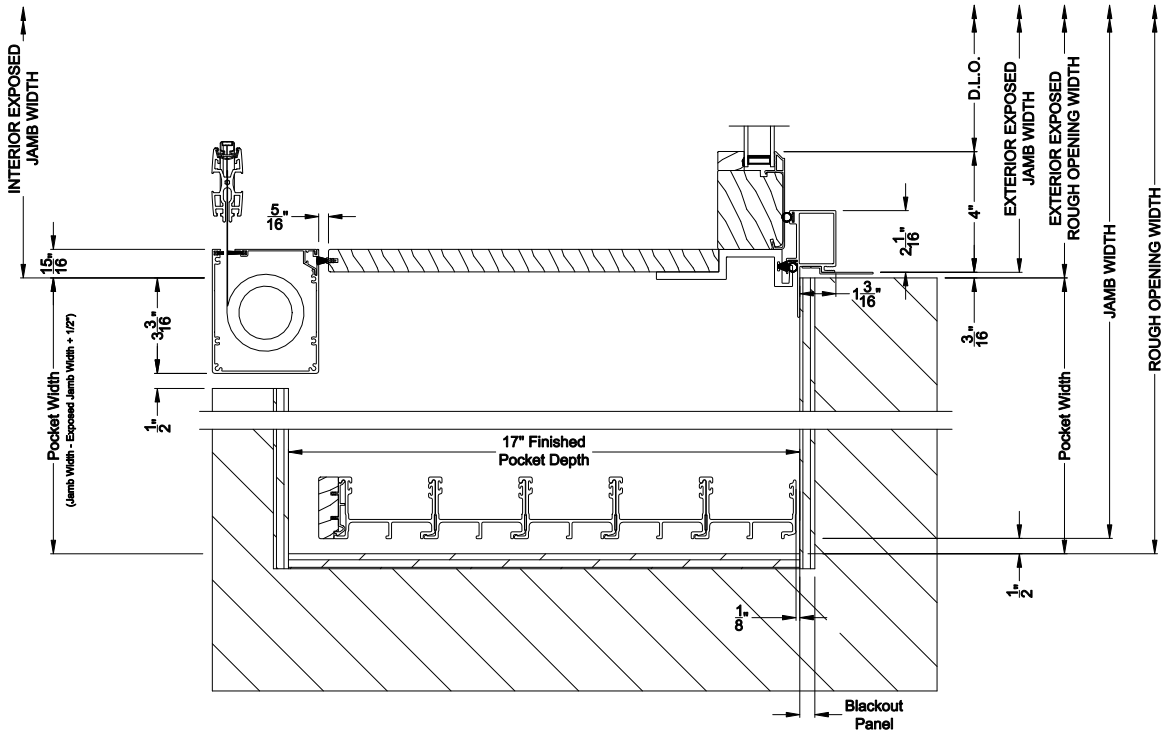

CONTEMPORARY 2-1/4" MULTI-SLIDE PATIO DOOR (8726)

Horizontal Section - 5 Panel or Bi-parting 10 Panel Door
Shown with optional Centor screen

Note: All dimensions are approximate. Weather Shield reserves the right to change specifications without notice.